CAMINO
DI SERIE

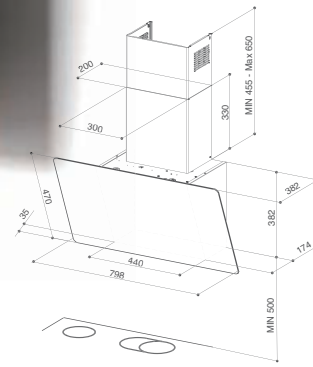

V-AIR

V-AIR KL A80 cod. 330.0615.685

FABER CLOUD · AIR QUALITY SENSOR · K-LINK · SOUND PRO · INTENSIVE SPEED · REMOTE CONTROL · LED LIGHT

(optional)

A+ ENERGY

FEATURES

Finish
- Black and light brown glass

Controls
Touch control

Lighting
LED lights

Grease filter
Cassettes dishwasher safe

Ø of air outlet
150 / 120 mm

Width
800 mm

Energy class
A+

PERFORMANCE

Speed	1	2	3	INT
Air capacity IEC point	300	430	620	770
Pressure	460	550	590	600
Input	150	200	240	250
Noise level	48	56	63	68

ACCESSORIES

Cod. 112.0157.240
F8 Charcoal filter

Cod. 112.0615.733
Remote control

Cod. 112.0252.439
Recycling version kit WH

Cod. 112.0252.442
Recycling version kit BK

Cod. 112.0158.127
FHP8 Charcoal filter High Performance

Cod. 112.0185.278
FLL8 Charcoal filter Long Lasting